MBE & AEPF

Single Stage Operation Wiring Diagram

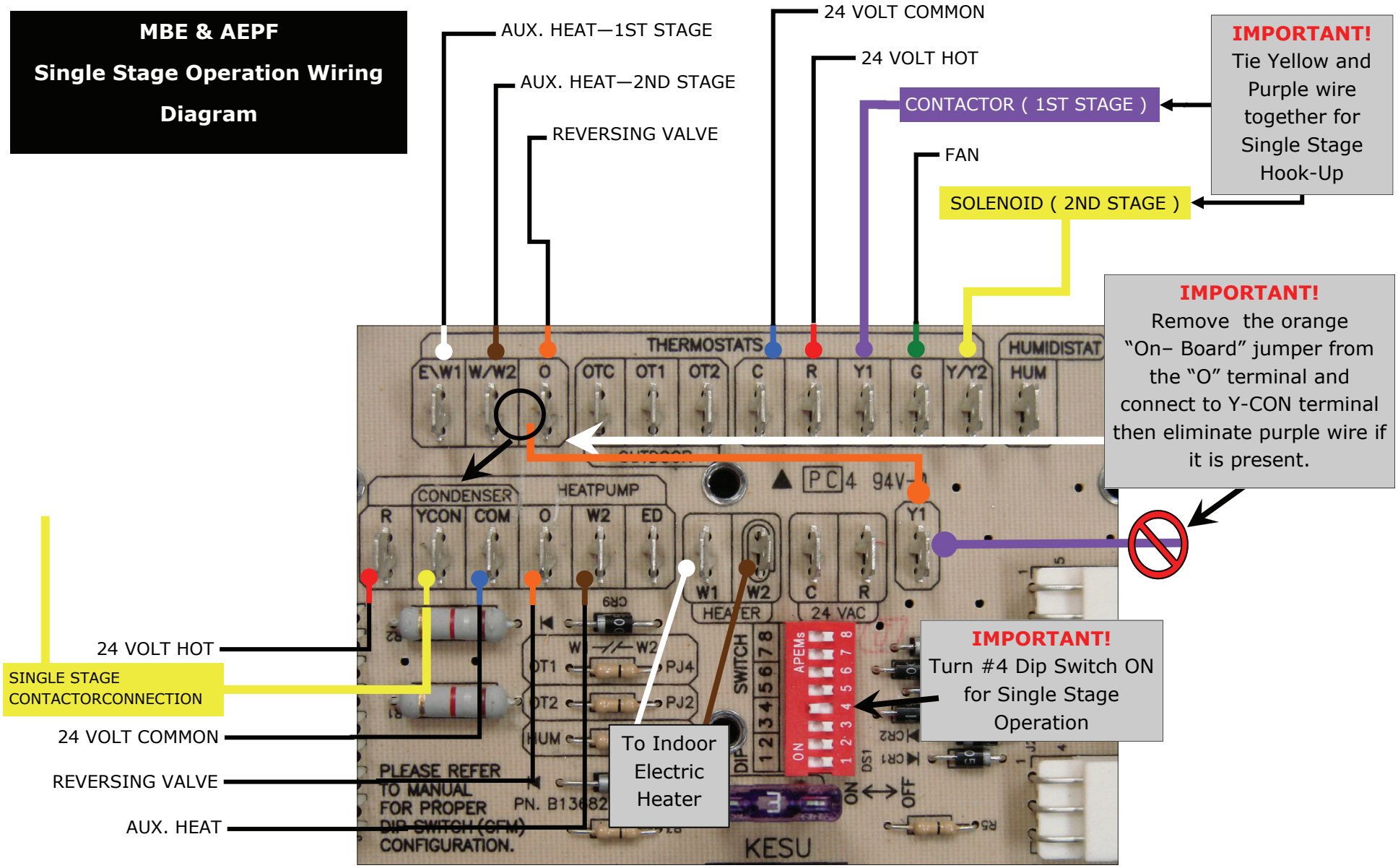

NOTE

An exception to this instruction is when using the **AEPF3036** air handler needing only 2 tons of airflow . Please refer to the Dip switch settings for additional information.